DIGITAL INDICATOR

WITH 0.001MM RESOLUTION

mm/in | Battery + CR2032 | Data output

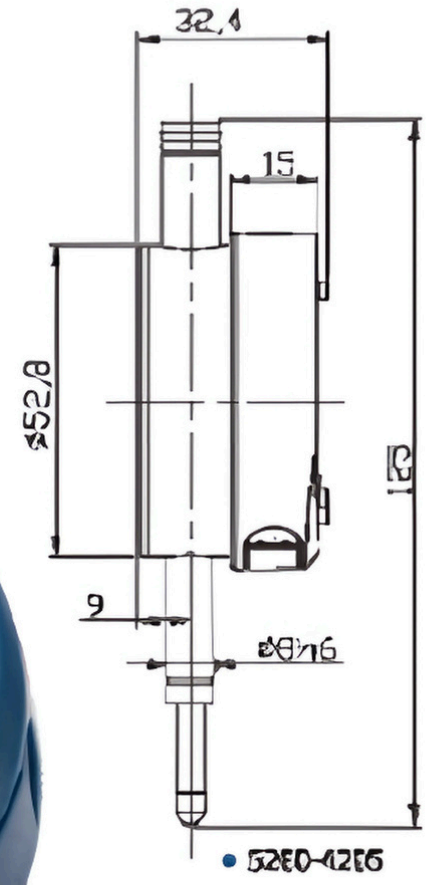

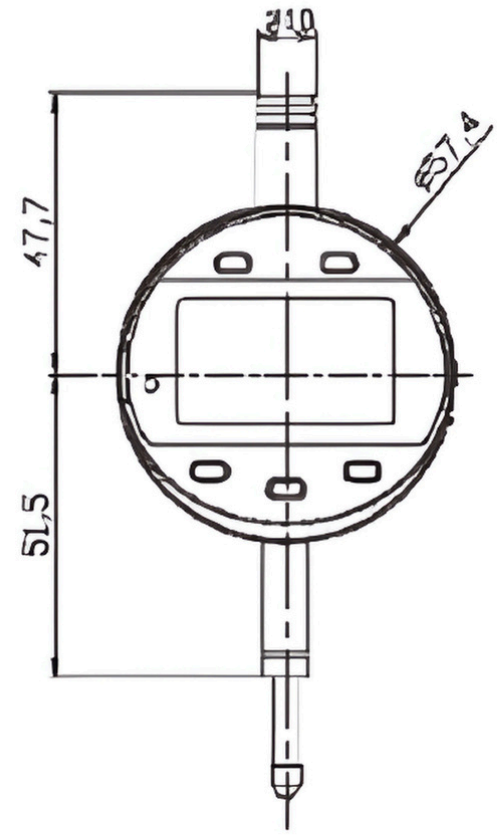

- Calibration certificate provided with total forward error, hysteresis error, total error and deviation error on it
- Watchcase made of high-strength aluminum alloy guaranteeing low deformation
- Glass grating for high accuracy and stable performance
- Temperature and humidity test for each product, ensuring the normal use of each in harsh environment
- Copper sleeve and rod precisely ground to reduce shaking

Unit: mm

Code	Range	Resolution	Accuracy
5260-4205	0-12.7/0-0.5"	0.001/0.00005"	0.004
5260-4210	0-25.4/0-1.0"	0.001/0.00005"	0.005
5260-4215	0-50.8/0-2.0"	0.001/0.00005"	0.006
5260-4220	0-101.6/0-4"	0.001/0.00005"	0.010